## OPTIONS

**Methods of installation**
- attached by bolts to foundation

**Logo**
- none
- etching in stainless steel
- cut in steel
- sticker

## DESCRIPTION

**Self-service bicycle repair station - designed so that in addition to its primary function, i.e. repairing bicycles, it also has a modern and attractive appearance.**

The **cyclists themselves** were actively involved in the design process **-** thanks to this, we can now present a station that meets the expectations of the group most interested in its use. The station is made **of thick and durable steel** and the finishing touches are in elegant stainless steel. The station can be painted to the customer's specifications, any RAL colour. Optionally, for an extra charge, the station can be made entirely of stainless steel.

The tools for repairing the bicycle are attached to the station with PVC-wrapped steel cables to prevent possible theft.
Tool kit available at the station: **screwdriver**; cross head and flat head in stainless steel **spanners**; stainless steel; 13, 14, 15, 16 mm **Allen spanners**; stainless steel; 2, 3, 4, 5, 6, 8 mm **hand pump**; compatible with Presta and Schreder valves **chain str**ipper; 9, 10, 11 speed (supports Shimano 11 speed SPD, does not support Campagnolo 11 speed chain!); stainless steel **spoke (nipple) spanner**; Mavic MTB, 3.22, 3.45 and CNSPOKE spanner (3.2-3.3-3.4 mm); stainless steel **T 25 star spanner**; stainless steel **8 mm…**

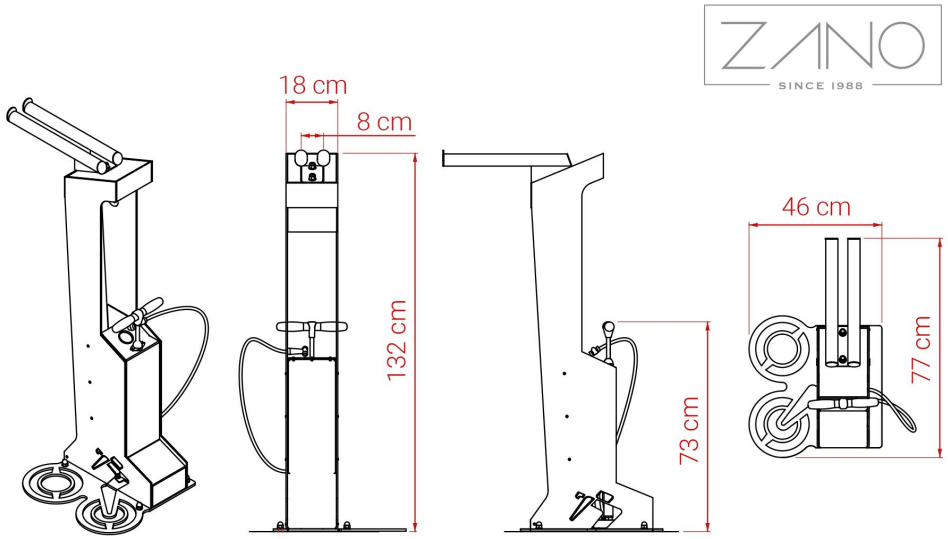


## GENERAL TECHNICAL DATA

### Dimensions
- width: 46 cm
- height: 132 cm
- depth: 77 cm

### Materials
- carbon steel (s235jr)
- stainless steel (1.4301)

### Weight
- 50 kg

ZANO

Product:
Kangu Bicycle repair station
Catalog number: **18.004.2**
Designer: Filip Babiarz

In accordance with the Polish Law on Copyright and Related Rights of 04.02.1994 (Offcial Journal of Laws No. 24, item 83, corrected: Journal of Laws No. 43, item 170) and in accordance with the EU copyright legislation including all EU directives and regulations on copyright , Zano Mirosław Zarotynski Company, reserves the copyright of drawings, descriptions, 3D models, renderings, graphics, content contained in offers, attachments to offers and all other documents. Its content is the intellectual property of ZANO Miroslaw Zarotinski company. The use of author's ideas, solutions, copying, distribution of photos, graphics or fragments of graphics, descriptive texts, for profit, without the permission of the author - ZANO Mirosław Zarotynski company - is prohibited and constitutes a copyright infringement and is punishable.

td>

**NOTE: The drawings do not reflect the actual dimensions of the foundation. They are only exemplary assembly schemes taking into account the type of anchoring and the substrate material to which the furniture is to be fixed.**

The size of the foundation depends on the local foundation conditions.

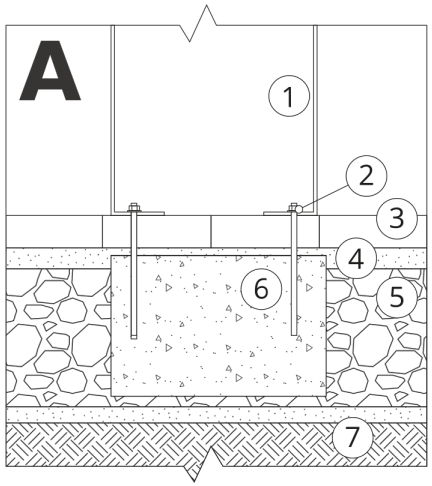


## INSTALLATION INTO PAVING WITH FOUNDATION

**Description of the assembly**

1. ZANO product
2. Quick-action fastener or chemical anchor
3. Stone paving / concrete paving / stone slabs / concrete slabs
4. Sand ballast (approx. 2 - 4 cm)
5. Stone aggregate substructure
6. Concrete foundation, class C16/20 (top surface concrete 10 cm below paving surface)
7. Ground

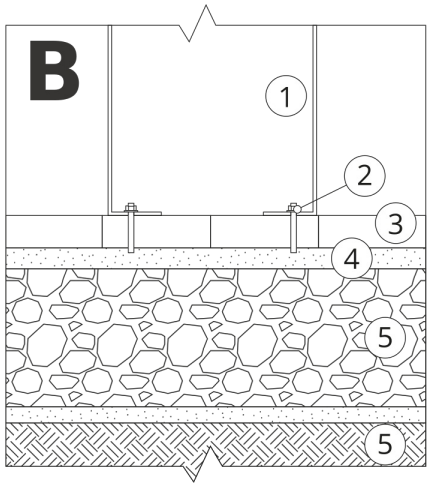


## INSTALLATION TO PAVING

**Description of the assembly**

1. ZANO product
2. Quick-action fastener or chemical anchor
3. Stone paving / concrete paving / stone slabs / concrete slabs
4. Sand ballast (approx. 2 - 4 cm)
5. Stone aggregate substructure
6. Ground

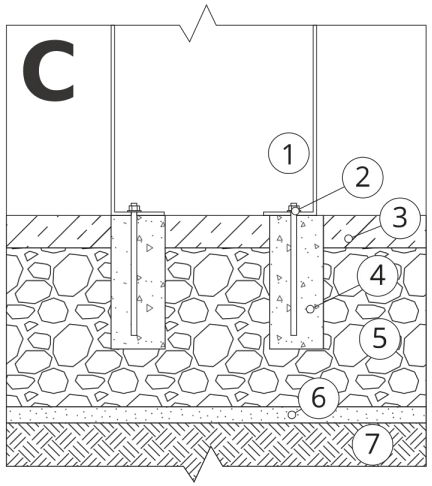


## CONCRETE / ASPHALT MOUNTING

**Description of the assembly**

1. ZANO product
2. Quick-action fastener or chemical anchor
3. Fixed hardened surface e.g. concrete or asphalt
4. Concrete foundation, class C16/20 (top surface concrete 10 cm below paving surface)
5. Stone aggregate substructure
6. Sand ballast (approx. 2 - 4 cm)
7. Ground

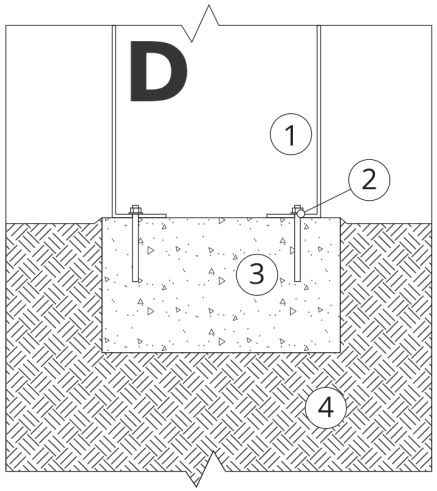


## MOUNTING TO CONCRETE FOUNDATION

**Description of the assembly**

1. ZANO product
2. Quick-action fastener or chemical anchor
3. Concrete foundation, class C16/20 (top surface concrete 10 cm below paving surface)
4. Ground