OPTIONS

Top
- soft wood
- hardwood of European origin
- hard wood (oil finish)
- premium hard wood
- HPL
- carbon steel (s235Jr)
- stainless steel (Aisi 304)

Methods of installation
- embedded in concrete

DESCRIPTION

Table 13.046.1 Scandik is a contemporary street furniture, ideal for catering outlets, restaurants, cafés, gas stations. It will also fit perfectly in the park. We can add three types of Scandik seat to the table: without backrest, with backrest and armrests (especially if we assume that the furniture will be used by seniors).
The table is made of steel (construction) and wood (table top). On request, we make the table in stainless or carbon steel, galvanized and powder coated in one of the available RAL colours. The table top is made in domestic or exotic wood. It is also possible to make the table top of laminate or steel.

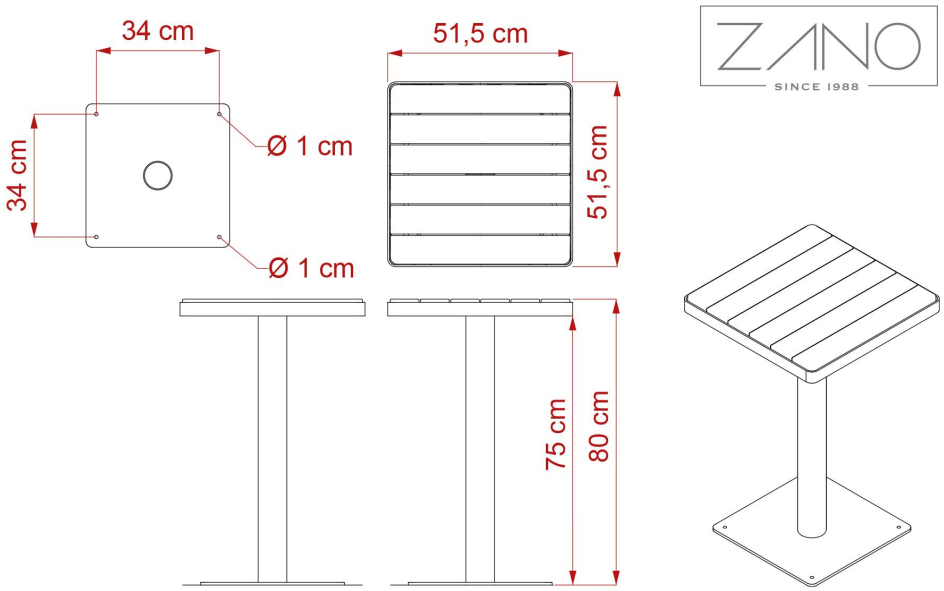

GENERAL TECHNICAL DATA

Weight
- 18 kg

Materials
- steel: carbon or stainless
- HPL
- wood: domestic-indigenous or exotic

Dimensions
- width: 51.5 cm
- height: 80 cm
- depth: 51.5 cm

ZANO

Product: Table Scandik
Catalog number: **13.046.1**
Designer: Iwona Żaczek

In accordance with the Polish Law on Copyright and Related Rights of 04.02.1994 (Offcial Journal of Laws No. 24, item 83, corrected: Journal of Laws No. 43, item 170) and in accordance with the EU copyright legislation including all EU directives and regulations on copyright , Zano Mirosław Zarotynski Company, reserves the copyright of drawings, descriptions, 3D models, renderings, graphics, content contained in offers, attachments to offers and all other documents. Its content is the intellectual property of ZANO Miroslaw Zarotinski company. The use of author's ideas, solutions, copying, distribution of photos, graphics or fragments of graphics, descriptive texts, for profit, without the permission of the author - ZANO Mirosław Zarotynski company - is prohibited and constitutes a copyright infringement and is punishable.

NOTE: The drawings do not reflect the actual dimensions of the foundation. They are only exemplary assembly schemes taking into account the type of anchoring and the substrate material to which the furniture is to be fixed.

The size of the foundation depends on the local foundation conditions.

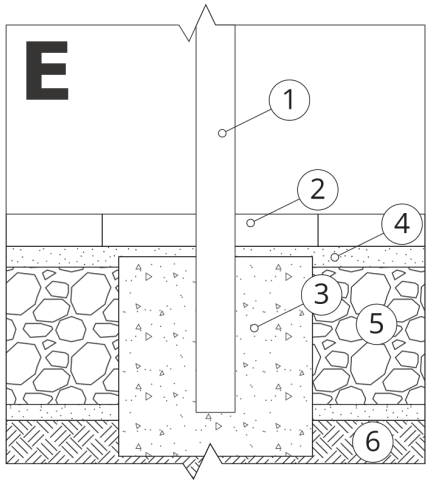

INSTALLATION INTO PAVING WITH FOUNDATION

Description of the assembly

1. ZANO product
2. Stone paving / concrete paving / stone slabs / concrete slabs
3. Sand ballast (approx. 2 - 4 cm)
4. Concrete foundation, class C16/20 (top surface concrete 10 cm below paving surface)
5. Ground

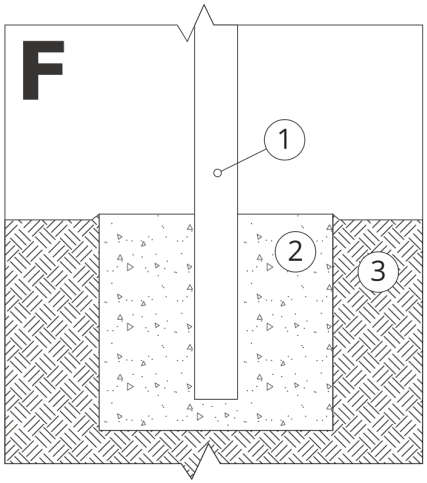

MOUNTING TO CONCRETE FOUNDATION

Description of the assembly

1. ZANO product
2. Concrete foundation, class C16/20 (top surface concrete 10 cm below paving surface)
3. Ground

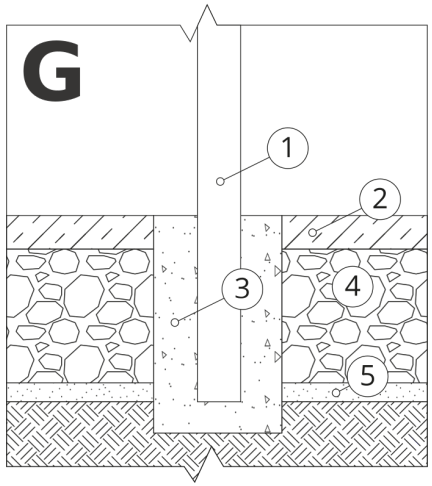

MOUNTING TO CONCRETE FOUNDATION

Description of the assembly

1. ZANO product
2. Fixed hardened surface e.g. concrete or asphalt
3. Concrete foundation, class C16/20 (top surface concrete 10 cm below paving surface)
4. Stone aggregate substructure
5. Sand ballast (approx. 2 - 4 cm)
6. Ground