OPTIONS

Methods of installation
- attached by bolts to foundation

Container
- galvanized steel container

DESCRIPTION

IVO litter bin is available in two variants: basic - without ashtray and with ashtray. The triangular form of the litter bin makes it easy to throw in rubbish from different sides, making them ideal for crowded areas and crossroads.

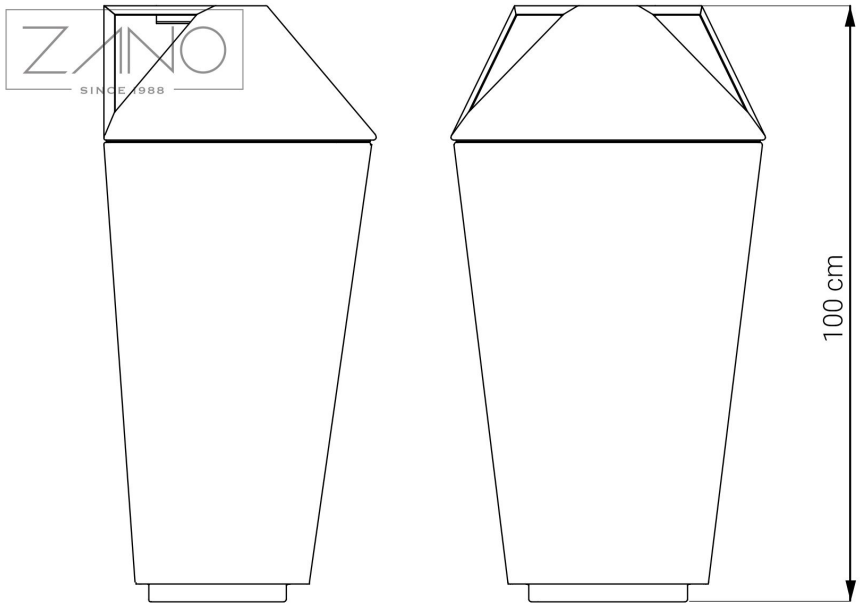

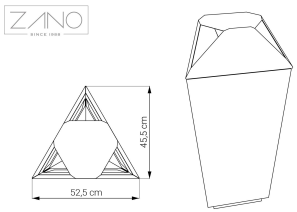

td>

GENERAL TECHNICAL DATA

Weight
- 29 kg

Materials
- carbon steel (s235jr)
- stainless steel (1.4301)

Dimensions
- width: 52.5 cm
- height: 100 cm

ZANO

Product: IVO litter bin
Catalog number: **03.045**
Designer: Iwona Żaczek

In accordance with the Polish Law on Copyright and Related Rights of 04.02.1994 (Offcial Journal of Laws No. 24, item 83, corrected: Journal of Laws No. 43, item 170) and in accordance with the EU copyright legislation including all EU directives and regulations on copyright , Zano Mirosław Zarotynski Company, reserves the copyright of drawings, descriptions, 3D models, renderings, graphics, content contained in offers, attachments to offers and all other documents. Its content is the intellectual property of ZANO Miroslaw Zarotinski company. The use of author's ideas, solutions, copying, distribution of photos, graphics or fragments of graphics, descriptive texts, for profit, without the permission of the author - ZANO Mirosław Zarotynski company - is prohibited and constitutes a copyright infringement and is punishable.

NOTE: The drawings do not reflect the actual dimensions of the foundation. They are only exemplary assembly schemes taking into account the type of anchoring and the substrate material to which the furniture is to be fixed.

The size of the foundation depends on the local foundation conditions.

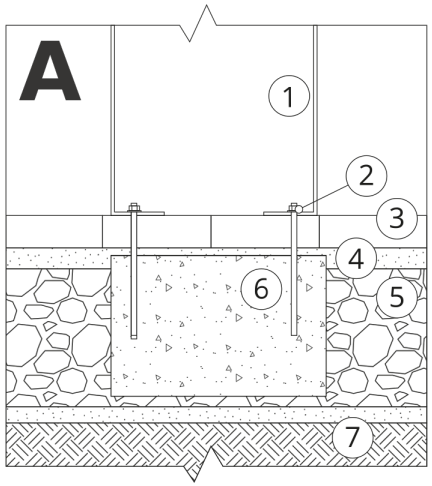

INSTALLATION INTO PAVING WITH FOUNDATION

Description of the assembly

1. ZANO product
2. Quick-action fastener or chemical anchor
3. Stone paving / concrete paving / stone slabs / concrete slabs
4. Sand ballast (approx. 2 - 4 cm)
5. Stone aggregate substructure
6. Concrete foundation, class C16/20 (top surface concrete 10 cm below paving surface)
7. Ground

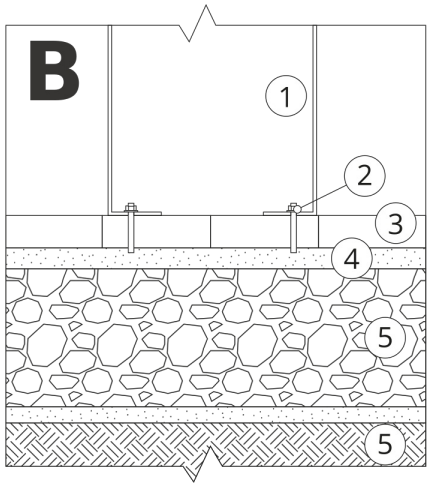

INSTALLATION TO PAVING

Description of the assembly

1. ZANO product
2. Quick-action fastener or chemical anchor
3. Stone paving / concrete paving / stone slabs / concrete slabs
4. Sand ballast (approx. 2 - 4 cm)
5. Stone aggregate substructure
6. Ground

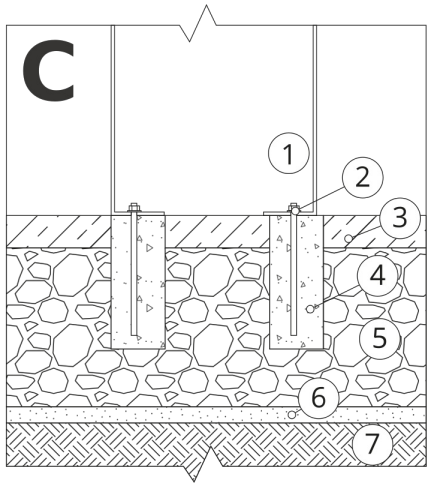

CONCRETE / ASPHALT MOUNTING

Description of the assembly

1. ZANO product
2. Quick-action fastener or chemical anchor
3. Fixed hardened surface e.g. concrete or asphalt
4. Concrete foundation, class C16/20 (top surface concrete 10 cm below paving surface)
5. Stone aggregate substructure
6. Sand ballast (approx. 2 - 4 cm)
7. Ground

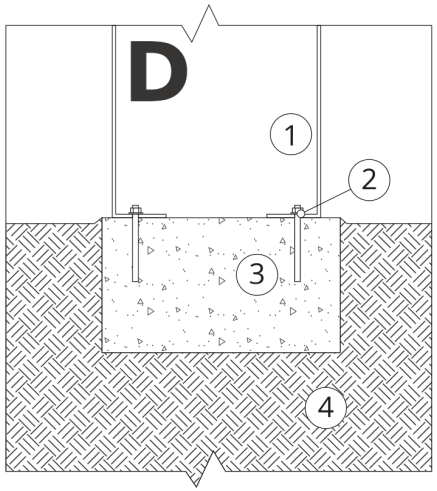

MOUNTING TO CONCRETE FOUNDATION

Description of the assembly

1. ZANO product
2. Quick-action fastener or chemical anchor
3. Concrete foundation, class C16/20 (top surface concrete 10 cm below paving surface)
4. Ground