OPTIONS

Methods of installation
- embedded in concrete

Fence mounts
- single sided
- double sided
- none

DESCRIPTION

Olimpia 01.082 is a stainless steel static bollard, which provide perimeter protection whilst also adding contemporary style and elegance to the surrounding landscape. Thanks to the stainless steel this model is corrosion resistant and requires very littlemaintenance to retain its original appearance. This means that the material provides attractive ‘life cost’ benefits when compared to alternatives, such as carbon steels. What is more, stainless steel is also 100% recyclable. Presented bollards provide visual separation between vehicle and pedestrian areas- pure functionality and design.

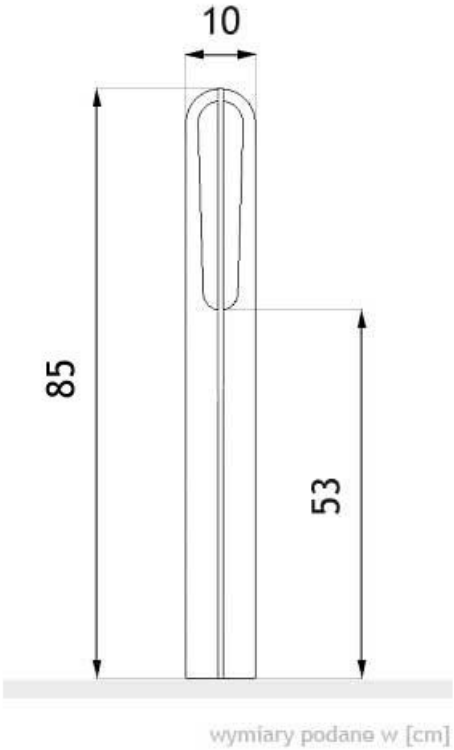

GENERAL TECHNICAL DATA

Materials
- carbon steel or stainless steel

Dimensions
- width: 10 cm
- height from ground surface: 85 cm
- height with anchoring section: 125 cm

ZANO

Product: Olimpia Bollard
Catalog number: **01.082**
Designer:
Mateusz Wełmiński

In accordance with the Polish Law on Copyright and Related Rights of 04.02.1994 (Offcial Journal of Laws No. 24, item 83, corrected: Journal of Laws No. 43, item 170) and in accordance with the EU copyright legislation including all EU directives and regulations on copyright , Zano Mirosław Zarotynski Company, reserves the copyright of drawings, descriptions, 3D models, renderings, graphics, content contained in offers, attachments to offers and all other documents. Its content is the intellectual property of ZANO Miroslaw Zarotinski company. The use of author's ideas, solutions, copying, distribution of photos, graphics or fragments of graphics, descriptive texts, for profit, without the permission of the author - ZANO Mirosław Zarotynski company - is prohibited and constitutes a copyright infringement and is punishable.

NOTE: The drawings do not reflect the actual dimensions of the foundation. They are only exemplary assembly schemes taking into account the type of anchoring and the substrate material to which the furniture is to be fixed.

The size of the foundation depends on the local foundation conditions.

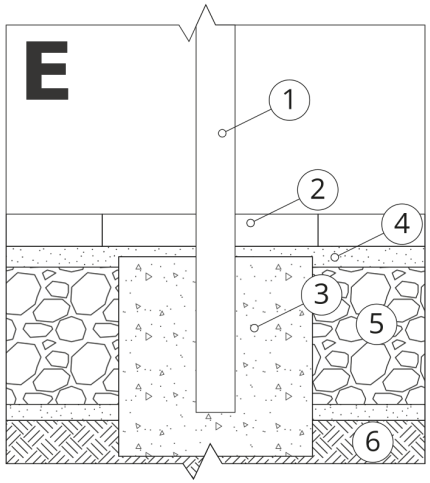

INSTALLATION INTO PAVING WITH FOUNDATION

Description of the assembly

1. ZANO product
2. Stone paving / concrete paving / stone slabs / concrete slabs
3. Sand ballast (approx. 2 - 4 cm)
4. Concrete foundation, class C16/20 (top surface concrete 10 cm below paving surface)
5. Ground

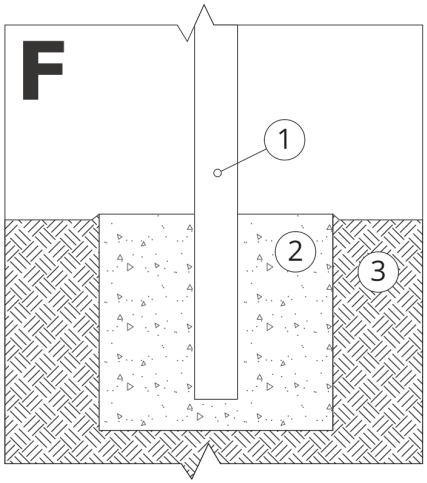

MOUNTING TO CONCRETE FOUNDATION

Description of the assembly

1. ZANO product
2. Concrete foundation, class C16/20 (top surface concrete 10 cm below paving surface)
3. Ground

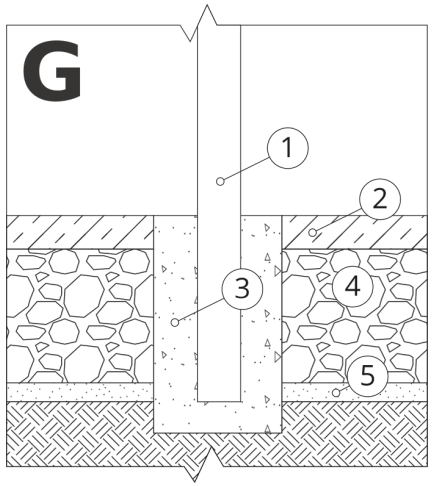

MOUNTING TO CONCRETE FOUNDATION

Description of the assembly

1. ZANO product
2. Fixed hardened surface e.g. concrete or asphalt
3. Concrete foundation, class C16/20 (top surface concrete 10 cm below paving surface)
4. Stone aggregate substructure
5. Sand ballast (approx. 2 - 4 cm)
6. Ground